ABATO® Motoren

Innovation in Power Generation©

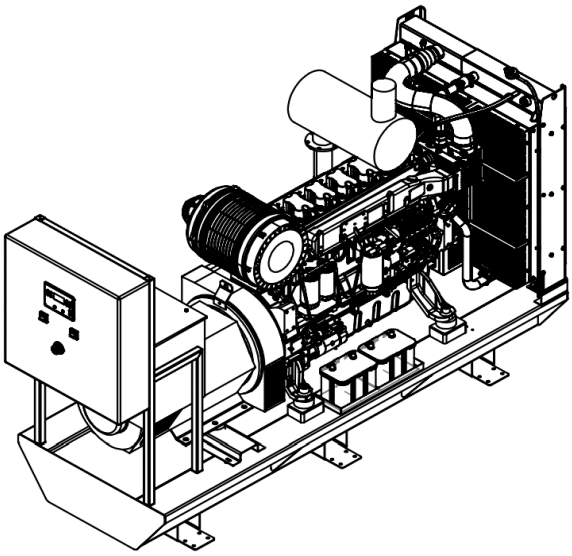

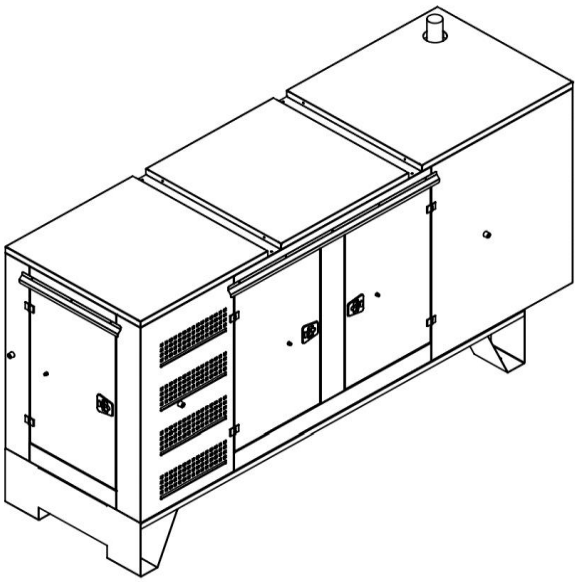

AB320-OPEN

Dimensions L x W x H	2800 x 1020 x 1850 mm
Weight	2600 kg

AB320-CANOPY

Dimensions L x W x H	3850 x 1200 x 2050 mm
Weight	4075 kg

General information

Genset power PRP	320 kVA
Genset power ESP	350 kVA

Engine power (PRP)	256 kW
Rated current	461 A

Engine

Fuel	Diesel
Fuel tank capacity	600 L
Autonomy with 100% load	8,5 h
Engine speed	1500 rpm

Alternator

Voltage	400 V
Frequency	50 Hz
Rated power factor	0,8
Efficiency	93,8%

Prime Power (PRP)

Prime Power is the maximum power available for unlimited hours of usage in a variable load application. The average load factor should not exceed 70% of the engine's PRP power rating during any 24 hour period. An overload capability of 10% is available, however, this is limited to 1 hour within every 12 hour period.

Emergency Standby Power (ESP)

Emergency Standby Power is the maximum power available for a varying load for the duration of a main power network failure. The average load factor over 24 hours of operation should not exceed 70% of the engine's ESP power rating. Typical operational hours of the engine is 200 hours per year, with a maximum usage of 500 hours per year. This includes an annual maximum of 25 hours per year at the ESP power rating. No overload capability is allowed. The engine is not to be used for sustained utility paralleling applications.

Platinalaan 10
5234 GH 's-Hertogenbosch
Netherlands

Phone: +31 (0)88 2228600
Email: info@abato.nl
Website: www.abato.nl

ABATO® Motoren
Innovation in Power Generation©

Engine specifications

General information	
Engine manufacturer	Baudouin
Engine model	6M16G350/5
Engine speed	1500 rpm
N° of Cylinders / Valves	6 / 24
Cylinders arrangement	In line
Bore x Stroke	127 x 130 mm
Displacement	9,7 L
Thermodynamic Cycle	Diesel 4 stroke
Compression ratio	17 : 1
Injection System	Direct
Fuel System	Mechanical Pump
Aspiration	Turbocharged and aftercooled

Noise	
Diesel engine noise	111 dB(A)

Lubrication system	
Oil capacity Low / High	19 / 22 L
Oil pressure under normal conditions	3,5 - 5,8 Bar
Max. oil temp	105 °C
Oil fuel consumption ratio	≤ 0.2 %
Total system capacity including filters	30,0 L

Electrical system	
Electrical system voltage	24 V
Starter power	9 kW
Dynamo charger current	70 A

Air intake	
Air intake temperature rise	≤ 15 °C
Air intake restriction clean filter	≤ 35 mbar
Air intake restriction dirty filter	≤ 70 mbar
Recommended air flow PRP	19,8 m³/min
Recommended air flow ESP	21,0 m³/min
Min. diameter of intake pipe	100 mm

Exhaust system	
Max. exhaust back pressure	110 mBar
Max. exhaust temp before turbocharger	720 °C
Max. exhaust temp after turbocharger	550 °C
Exhaust flow @ PRP	55,4 m³/min
Exhaust flow @ ESP	58,2 m³/min
Min. diameter of exhaust pipe	100 mm

Cooling system	
Max. ambient temp up to	50 °C
Radiator type	Mechanical
Fan type	Belt driven pusher
Coolant capacity of radiator and pipes	22 L
Thermostat opening temp	76 °C
Thermostat full open temp	88 °C
Coolant capacity of the engine	22 L
Cooling fan airflow	450 m³/min

Aftercooling system	
Aftercooler system type	Air to air
Max. intake temp @ 25°C ambient	55 °C
Max. diff intake / ambient temp	30 °C
Max. pressure drop aftercooler	120 mBar

Fuel system	
Governor	Electronic
Max. pressure at fuel inlet	1,3 Bar
Max. fuel inlet temp	50 °C
Fuel supply flow	169 L/h

Fuel consumption	
Consumption at 100% ESP	78,4 L/h
Consumption at 100% PRP	70,5 L/h
Consumption at 75% PRP	52,3 L/h
Consumption at 50% PRP	35,4 L/h
Consumption at 25% PRP	18,9 L/h
Fuel consumption tolerance	± 3%

*All ratings are based on operating conditions under ISO 8528-1, ISO 3046, DIN6271 Performance tolerance of ±5%.

Platinalaan 10
5234 GH 's-Hertogenbosch
Netherlands

Phone: +31 (0)88 2228600
Email: info@abato.nl
Website: www.abato.nl

ABATO® Motoren

Innovation in Power Generation©

Alternator specifications

General information	
Alternator manufacturer	XINGNUO or eq.
Alternator model	XN4E or eq.
Voltage	400 V
Frequency	50 Hz
Rated power factor	0,8
Technology	Brushless, AVR
Voltage measurement	3-phase
Efficiency	93,8%

Internal assembly	
Maximum overspeed	2250 Rev/Min
Stator winding	Double layer lap
Winding pitch	2/3
Winding leads	12
Bearing amount	1
Stator wdg. Resistance per phase at 22°C	0.009 Ohms
Rotor wdg. Resistance at 22°C	1.19 Ohms

Cooling	
Cooling air	0.486 m³/sec
Temp rise cont. H	125/40 °C

Protection and distortion	
Insulation system	H
Protection	IP23
Telephone interference	THF <2%
Wafevorm distortion without load	< 1.5%
Wavevorm distortion with a linear load	< 5.0%

Alternator highlights

Low telephone interference (THF) as defined by IEC 60034-1
High efficiency and motor startup capability
Rigid assembly, effectively reduces the vibration during running
All rotors are dynamically balanced to conform with BS6861
Non-maintenance sealed-for-life ball bearing
Suitable for environment with 95% relative humidity

*Used alternator meets the requirements of BS5000, VDE0530, UTE5100, NEMA MGt-22, CEMA, IEC34-1, CSAC22.2-100 and AS1359

ComAp InteliLite AMF 25

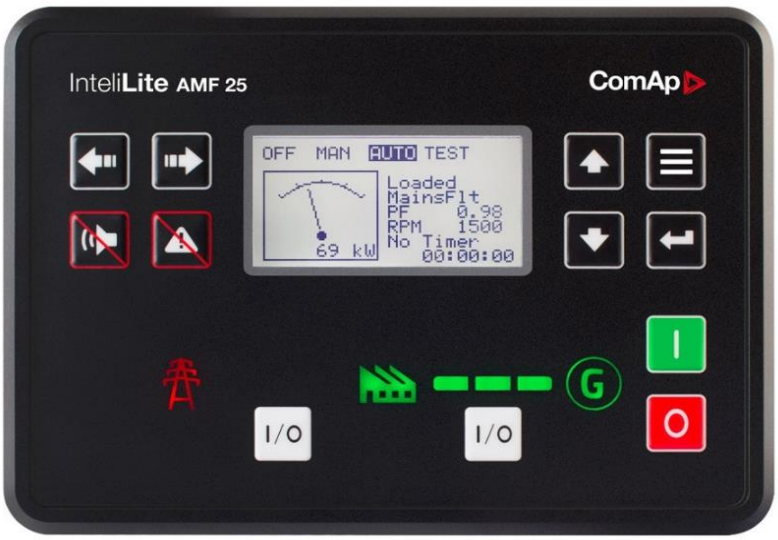

The following features are included in the used model:

- Standby and Prime power applications
- Flexible event based history with up to 350 events
- 3 Phase generator current measurement
- Generator and Mains phase voltage measurement
- Active/reactive power measurement
- Active and reactive energy counter
- Battery charging alternator circuit connection
- Comprehensive gen-set protections
- CAN and USB on board
- Internet access using Ethernet, GPRS or 4G module
- Support for Modbus and SNMP protocols
- Cloud-based monitoring and control via WebSupervisor
- Active SMS or e-mails (module required)
- Geofencing and tracking via WebSupervisor
- 2x 10 A binary outputs for cranking and fuel solenoid
- Option for up to 16 additional binary inputs/outputs
- Operating temperature -20 + 70°C
- IP65 operator interface protection

Platinalaan 10
5234 GH 's-Hertogenbosch
Netherlands

Phone: +31 (0)88 2228600
Email: info@abato.nl
Website: www.abato.nl